Parts Catalog



SG13

S-Series Slicer
Smart Manual
Model: SG13

4/21/2025 Rev. AJ
IMPORTANT!
TO EXPEDITE SHIPMENT OF PARTS, ALWAYS SPECIFY MODEL, REV,
PART NUMBER, AND SERIAL NUMBER OF UNIT.

GLOBE FOOD EQUIPMENT COMPANY
2215 East River Road
Dayton, Ohio 45439

Parts Department
Toll Free 1-800-745-6238
E-Mail: info@globefoodequip.com
Website: www.globefoodequip.com

Not for resale

© Globe Food Equipment Company, 2025

995107 ECN 1168

Table of Contents

Description	Page
SG13 Knife Drive Assembly Components	4
SG13 Index Knob Components	6
SG13 Base Shroud Components	8
SG13 Gauge Plate Components	10
SG13 Index Slide Assembly Components	12
SG13 Ring Guard Assembly Components	14
SG13 Electrical Base Components	16
SG13 Knife Drive Motor Components	20
SG13 Transport Arm Assembly Components	22
SG13 Lift Lever Base Components	26
SG13 Carriage and End Weight Assembly Components	28
SG13 Knife and Knife Cover Components	30
SG13 Sharpener Assembly Components	32
SG13 Removable Carriage Components - Option	34
SG13 Knife Removal Tool - Option	36
SG13 Removable Knife Kit - Option	38
SG13 Removable Knife Drive Kit - Option	40
SG13 Wiring Schematic	42

SG13 Knife Drive Assembly Components

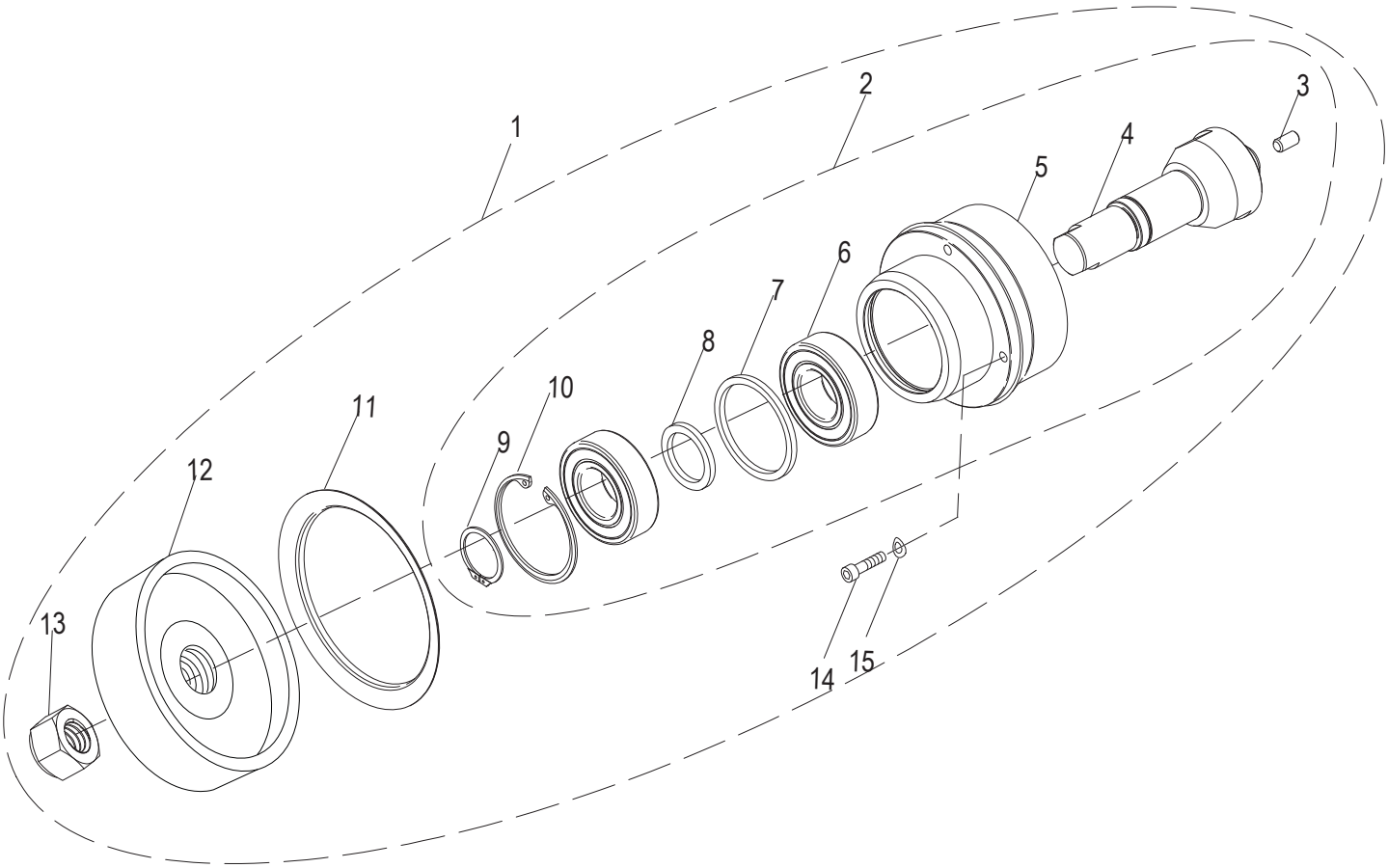

© Globe Food Equipment Company

SG13 Knife Drive Assembly Components

Item	Part Number	Description	Qty	Serial Number
1	450211	Knife Drive Assembly (Incl. items 2-15)	1	
2	420088	Knife Drive Bearing Assembly (Incl. items 3-10)	1	
3	510078	Knife Cover Bumper	1	
4	450102	Shaft, Knife Drive	1	
5	450215	Knife Drive Bearing Mount	1	
6	820045-02	Ball Bearing, Sealed	2	
7	450119	Outer Ring, Bearing Spacer	1	
8	450118	Inner Ring, Bearing Spacer	1	
9	800010	Retaining Ring 5101-98 Bowed External	1	
10	810427	Retaining Ring N5002-200	1	
11	520244	Knife Drive Boot	1	
12	450115	Knife Drive Pulley	1	
13	510033	Hex Nut, 7/8-20 Zinc	1	
14	810229	Socket Head Cap Screw 1/4-20x0.75	4	
15	810275	Spring Washer, 1/4x0.5	4	

© Globe Food Equipment Company

SG13 Index Knob Components

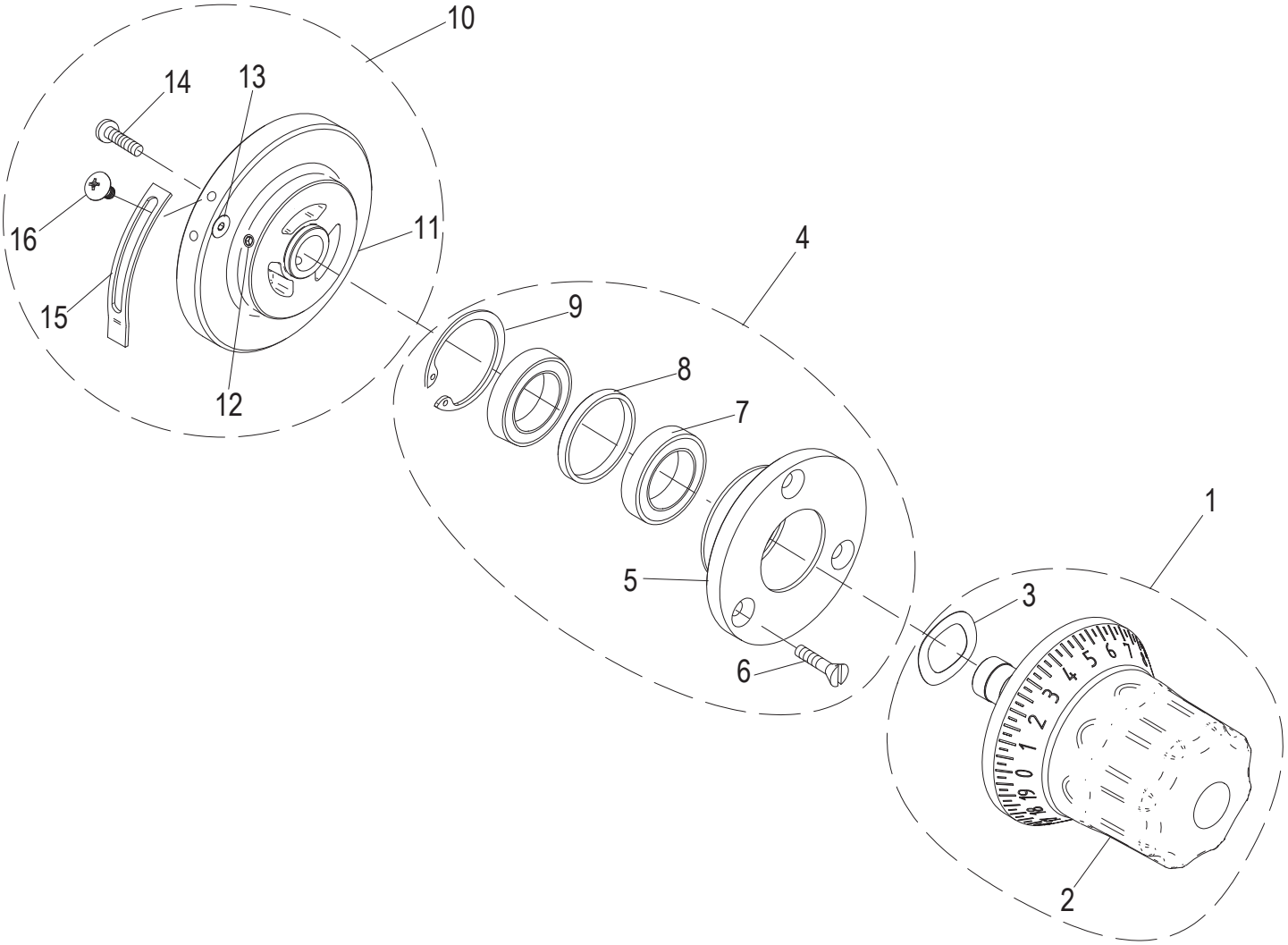

© Globe Food Equipment Company

SG13 Index Knob Components

Item	Part Number	Description	Qty	Serial Number
1	500044	Index Knob Kit (Incl. items 2-3)	1	
2	500022	Index Knob	1	
3	800136	Index Knob Tension Spring	1	
4	450214	Index Bearing Hub Assembly Kit (Incl. items 5-9)	1	
5	450150	Index Knob Bearing Hub	1	
6	800104	Mach. Screw #10-24x5/8 Flat Hd Slotted	3	
7	800011	Ball Bearing 20x32	2	
8	450069	Spacer, Index Bearing	1	
9	800031	Internal Beveled Retaining Ring 1.388	1	
10	500049	Index Cam with Stop Assembly (Incl. items 11-16)	1	
11	520350	Index Cam	1	
12	810463	Set Screw, Knurl Grip Cup Pt 1/4-28x3/4 (SST)	3	
13	800160	Socket Cap Screw #10-32x3/4 Flat Hd (SS)	1	
14	800105	Socket Cap Screw #10-32x5/8 Button-Hd	1	
15	300054	Cam Stop	1	
16	800138	Button Hd Cap Screw #10-32 x 3/8 SST	2	

© Globe Food Equipment Company

SG13 Base Shroud Components

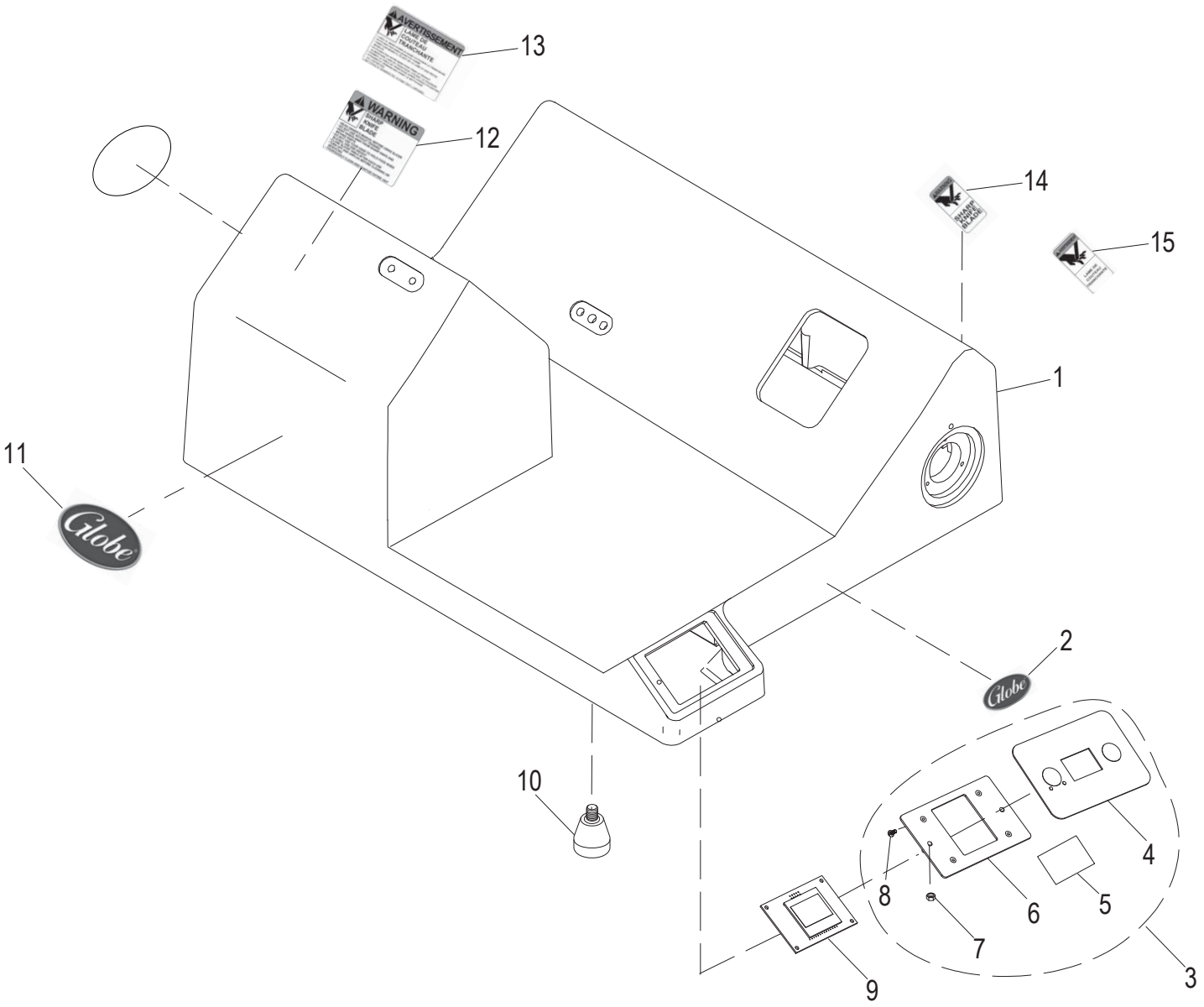

© Globe Food Equipment Company

SG13 Base Shroud Components

Item	Part Number	Description	Qty	Serial Number
1	450161-03	Slicer Base	1	
2	871-2	Globe Logo Decal 3.5"	1	
3	121071-01	Membrane Switch Kit (Incl. items 4-8)	1	
4	910192	Membrane Switch, Smart Manual	1	
5	910088	Pad, Alcohol Prep	1	
6	300092	User Interface Panel, Smart/Auto	1	
7	810422	Nylon Locknut 6-32	2	
8	810423	Phillips Pan Head Screw 4-40 x 0.25"	4	
9	121062	Display Assembly	1	
10	510031	Slicer Foot	4	
11	920202	Globe Logo Decal S - Series	2	
12	920200	Warning Label, Large	1	
13	920198	Warning Label, Large French	1	
14	920201	Warning Label, Small	1	
15	920199	Warning Label, Small French	1	

© Globe Food Equipment Company

SG13 Gauge Plate Components

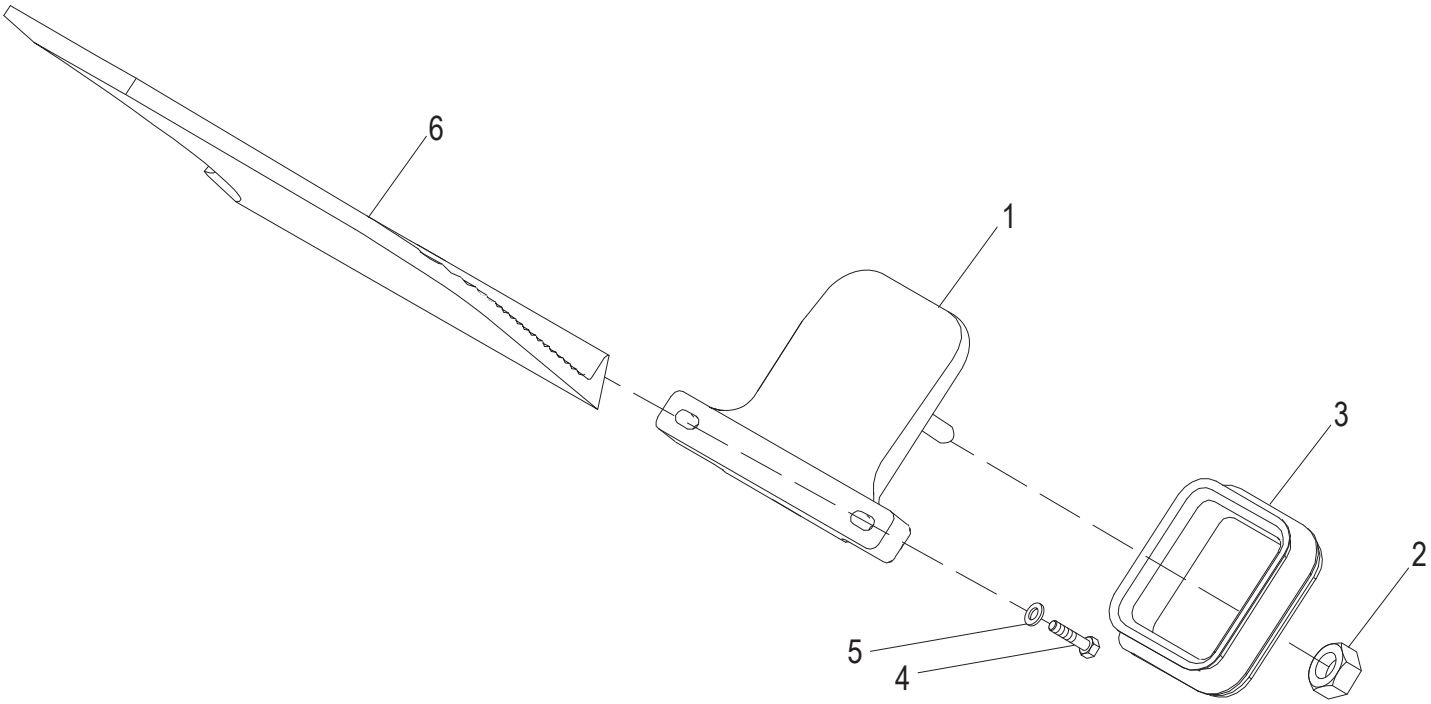

© Globe Food Equipment Company

SG13 Gauge Plate Components

Item	Part Number	Description	Qty	Serial Number
1	450212	Gauge Plate Base Assembly	1	
2	450054	Post Nut, Gauge Plate Ball Joint	1	
3	500001	Gauge Plate Seal	1	
4	890411	Cap Screw 3/8-16x1-1/2, Hex Hd with Nylon Patch	2	
5	810228	Flat Washer, fits 3/8 Screw, .885 OD	2	
6	450070	Gauge Plate	1	

© Globe Food Equipment Company

SG13 Index Slide Assembly Components

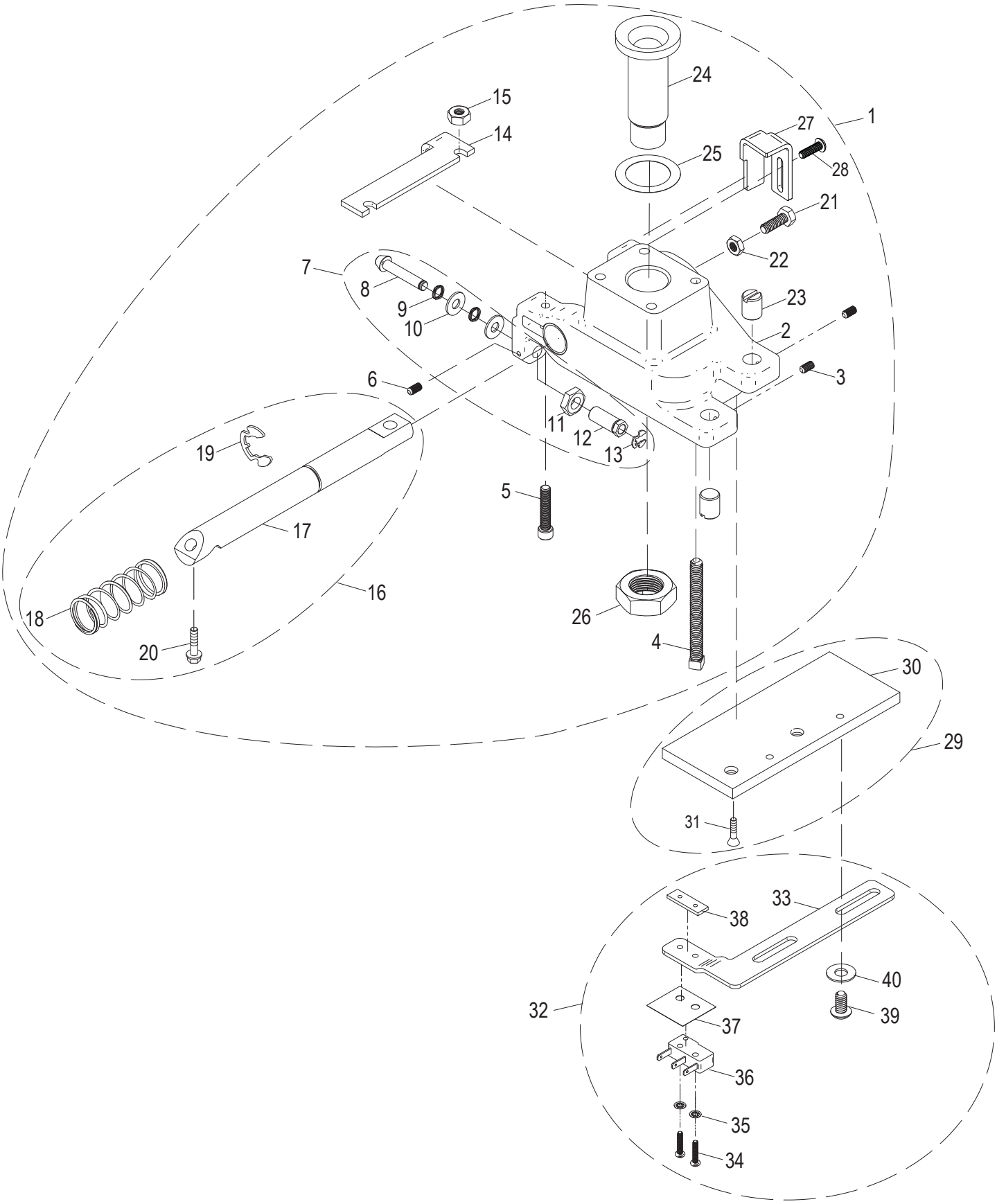

© Globe Food Equipment Company

SG13 Index Slide Assembly Components

Item	Part Number	Description	Qty	Serial Number
1	400140	Index Slide Kit (Incl. items 2-28)	1	
2	430028	Index Slide with Bushings	1	
3	810400	Set Screw #10-32x3/8 Cup Pt.	2	
4	810379	Retaining Clip Ring 5304-18	1	
5	450152	Follower Adjustment Post	1	
6	800091	Hex Socket Knurl-Cup Point Set Screw 8-32 X 0.1875"	1	
7	400121	Cam Follower Kit (Incl. items 8-13)	1	
8	450153	Follower	1	
9	800163	Wave Spring Cam Follower	2	
10	810410	Flat Washer 0.266x0.625	2	
11	810430	Jam Nut 3/8-24	1	
12	800144	Cap Screw 1/4-28x1-1/4 Socket Hd	2	
13	800146	Set Screw 5/16-18x3 Sq. Hd Cup Point	4	
14	300153	Stop Plate, Tilt Back	1	
15	800145	Nut 1/4-28 Hex	2	
16	400122	Index Slide Shaft Kit (Incl. items 17-20)	1	
17	450058	Index Slide Shaft	1	
18	800154	Index Spring	1	
19	800152	Retaining Ring (Klipring) 5304-75	1	
20	800058	Washer 5/16-18-1 Hex Hd Tapping Screw	2	
21	810431	Hex Head Screw 1/4-20x0.75	1	
22	810432	Jam Nut 1/4-20	1	
23	450057	Screw, Anti-Rotation	2	
24	450050	Ball Joint Rest	1	
25	800168	Gauge Plate Spacer Kit (Kit of 4)	1	
26	800043	Nut 7/8-14 UNF Hex Jam	1	
27	300154	Adjustment Stop	1	
28	800105	Socket Cap Screw #10-32x5/8 Button-Hd	2	
29	400128	Anti-Rotation Plate Kit (Incl. items 30-31)	1	
30	450056	Anti-Rotation Plate	1	
31	810003	Screw 1/4-20x3/4 Crossed Rec., Flat Hd, Tapping	2	
32	121079	Index Close Switch Kit (Incl. items 32-40)	1	
33	300062	Switch Mounting Plate	1	
34	800126	Mach. Screw #2-56x7/16 Pan Hd. Phillips	2	
35	800098	Lock Washer #2 Internal Tooth	2	
36	110223	Micro Switch, Pin Action	1	
37	140125	Micro Switch Insulator	1	
38	300055	Nut Plate	1	
39	800077	Hex Socket Button Head Screw #10-24 x 0.375	2	
40	870087	Flat Washer (Electrical Box Mounting)	2	

© Globe Food Equipment Company

SG13 Ring Guard Assembly Components

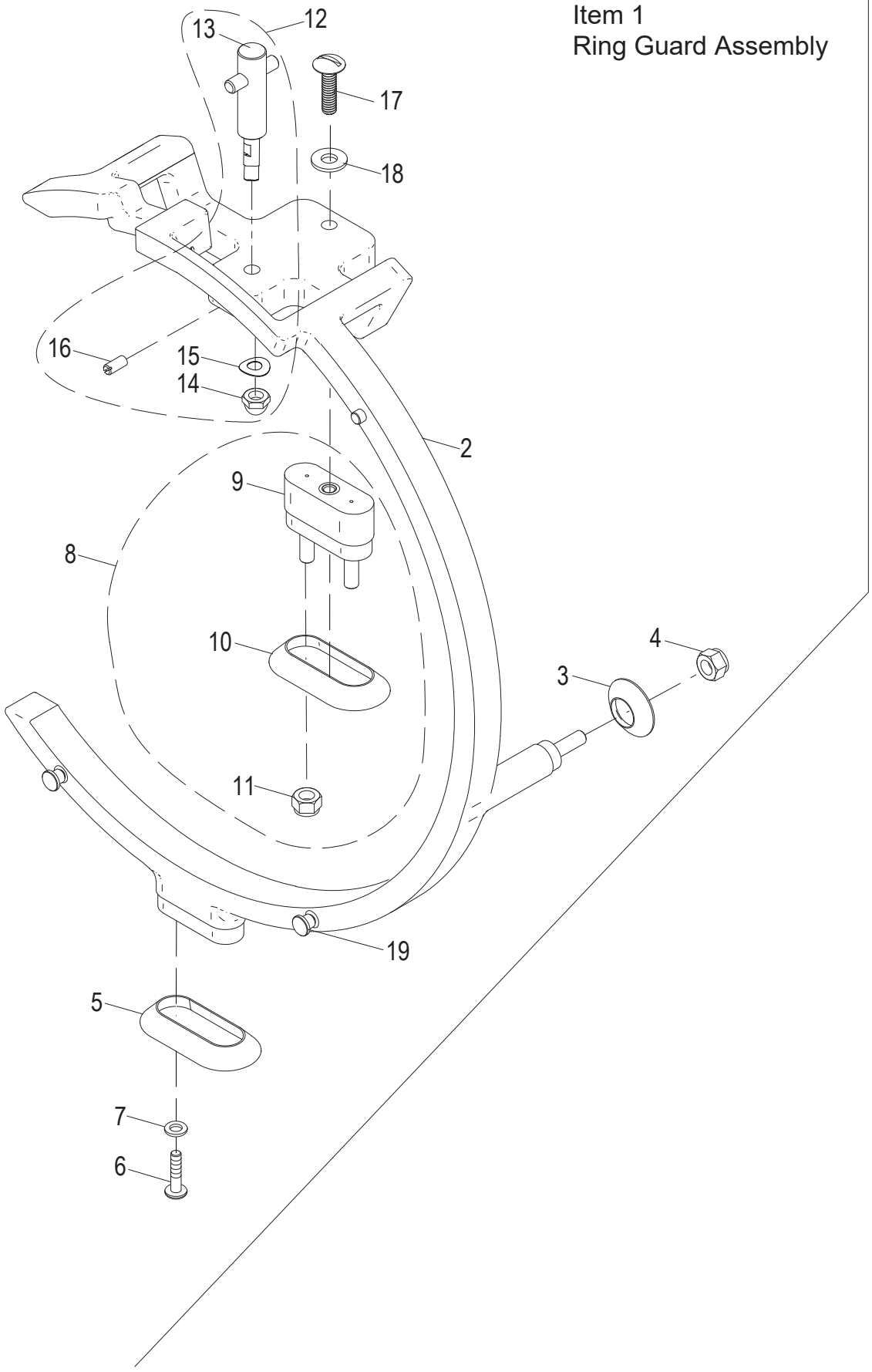

© Globe Food Equipment Company

SG13 Ring Guard Assembly Components

Item	Part Number	Description	Qty	Serial Number
1	500047-01	Ring Guard Assembly Kit (Incl. items 2-19)	1	
2	520316	Ring Guard	1	
3	520243	Round Boot, Ring Guard	1	
4	810438	Nylon Insert Lock Nut 1/4-20	1	
5	520242	Oval Boot, Ring Guard	1	
6	810358	Slotted Truss Head Screw 1/4-20 x 1.00	2	
7	810345	Flat Washer, 1/4 x 0.63	2	
8	450213	Ring Guard Spacer Kit (Incl. items 9-11)	1	
9	460064	Spacer, Ring Guard	1	
10	520242	Oval Boot, Ring Guard	1	
11	810438	Nylon Insert Lock Nut 1/4-20	2	
12	460069-01	Sharpener Mount Kit, Standard (Incl. items 13-16)	1	
13	450131	Sharpener Mount Kit	1	
14	800185	Acorn Nut, 1/4-28	1	
15	800184	Spring Washer 0.26x0.55x0.015	1	
16	810483	Slotted Set Screw, #10-32x0.50	1	
17	810358	Slotted Truss Head Screw 1/4-20 x 1.00	1	
18	810345	Flat Washer, 1/4 x 0.63	1	
19	450130	Locator Pin	2	

© Globe Food Equipment Company

SG13 Electrical Base Components

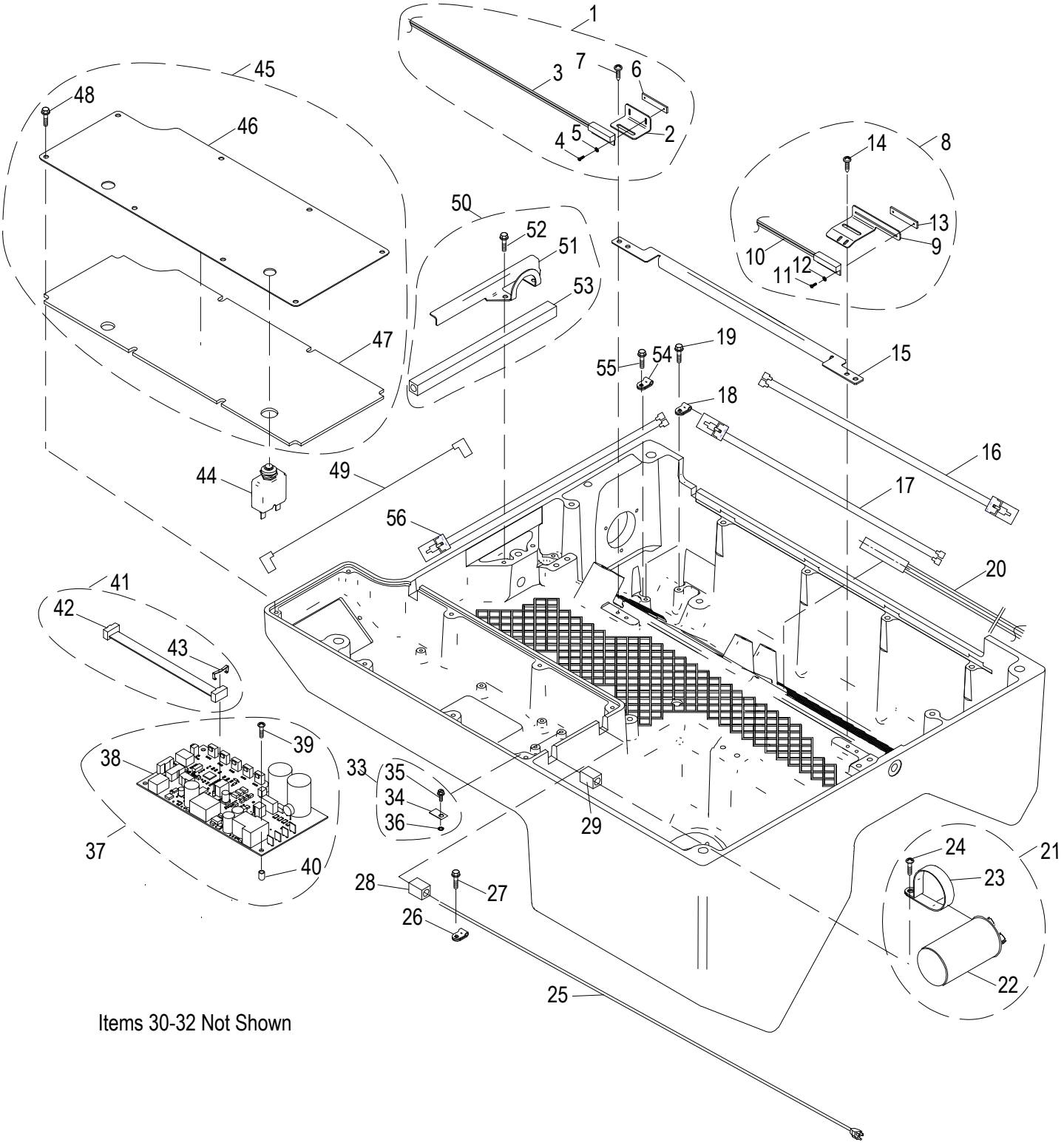

Items 30-32 Not Shown

© Globe Food Equipment Company

SG13 Electrical Base Components

Item	Part Number	Description	Qty	Serial Number
1	121083	Home Sensor Kit (Incl. items 2-7)	1	
2	310200	Home/Cut Sensor Mount	1	
3	110108	Sensor, Reed Switch, Carriage Home	1	
4	800101	Mach. Screw #1-64x1/4, 18-8 Pan Hd. Phillips (SST)	2	
5	800098	Lock Washer #2 Internal Tooth	2	
6	300056	Nut Plate	1	
7	800069	Phillips Round Head Thread Forming Screw 8-32 x 0.375"	2	
8	121084-01	Cut/Auto Sensor Kit (Incl. items 8-14)	1	
9	310204	Cut/Auto Engage Sensor Mount	1	
10	110111	Sensor, Reed Switch, Cut Sensor	1	
11	800101	Mach. Screw #1-64x1/4, 18-8 Pan Hd. Phillips (SST)	2	
12	800098	Lock Washer #2 Internal Tooth	2	
13	300056	Nut Plate	1	
14	800069	Phillips Round Head Thread Forming Screw 8-32 x 0.375"	2	
15	310208	Inner Wireway Cover	1	
16	100121	Wire Harness, Table Close Sensor	1	
17	100122	Wiring Harness, Automatic Switch	1	
18	110226	Clamp, Nylon Loop	2	
19	800069	Phillips Round Head Thread Forming Screw 8-32 x 0.375"	2	
20	110107	Harness, Reed Switch, Knife Cover Sensor	1	
21	121082-01	120V Capacitor Kit (Incl. items 22-24)	1	
22	140015	Capacitor, Knife Motor 120V	1	
23	110228	Capacitor Clamp (120V)	1	
24	800069	Phillips Round Head Thread Forming Screw 8-32 x 0.375"	1	
21	121082-02	220V Capacitor Kit (Incl. items 22-24) Not Shown	1	
22	140016	Capacitor, Knife Motor (220V) Not Shown	1	
23	110229	Capacitor Clamp (120V) Not Shown	1	
24	800069	Phillips Round Head Thread Forming Screw 8-32 x 0.375" Not Shown	1	
25	130225	Power Supply Cord, 120VAC, 15A	1	
26	110227	Power Cord Strain Relief	1	
27	800057	Screw 1/4-20x.75 Hex Washer Hd Tapping	1	
28	510045-01	Sleeve, Large Diameter Wire	1	
29	510044-01	Sleeve, Small Diameter Wire	1	
30	130008-01	Power Cord (220V/50Hz) Not Shown	1	
31	130226	Power Supply Cord Not Shown	1	
32	130228	Male Power Plug, Europe CEE7/7, 50Hz Not Shown	1	
30	130008-02	Power Cord (220V/60Hz) Not Shown	1	
31	130226	Power Supply Cord Not Shown	1	
32	130227	Three Blade Male Plug, NEMA 3-15, 60Hz Not Shown	1	
33	121080	Ground Location Tab Kit (Incl. items 34-36)	1	
34	910184	Tab, Ground Location	1	
35	800202	Green Slotted Hex Washer Head Screw #8-32 x 0.312	1	
36	800115	External Tooth Lock Washer #8x0.381	1	
37	121086-01	Control Board Kit (Incl. items 38-40)	1	
38	121061-02	Control Board Assembly	1	
39	800175	Screw #8-32x3/4 Crossed Recessed Tapping	4	
40	810450	Self Retaining Spacer	4	
41	121081	Ribbon Cable Kit (Incl. items 42-43)	1	
42	100126	Ribbon Cable Assembly Contol To Display Board	1	
43	180126	Retaining Clip, Ribbon Cable	2	
44	140017-01	Circuit Breaker	1	
44	140017-02	Circuit Breaker (220V) Not Shown	1	
45	300063	Electronics Cover & Gasket Kit (Incl. items 46-48)	1	

© Globe Food Equipment Company

SG13 Electrical Base Components

Item	Part Number	Description	Qty	Serial Number
46	300013	Cover, Electronics	1	
47	500016	Gasket, Electronic Cover	1	
48	800067	Screw #10-24x1/2 Hex Washer Hd Tapping	8	
49	100125	Wire Harness, Circuit Breaker	1	
50	300067-01	Front Wireway Cover Kit (Incl. items 51-53)	1	
51	310207	Cover, Front Wireway	1	
52	800067	Screw #10-24x1/2 Hex Washer Hd Tapping	2	
53	510045-02	Sleeve, Large Diameter Wire	1	
54	110230	Nylon Loop Clamp 5/16	1	
55	800069	Phillips Round Head Thread Forming Screw 8-32 x 0.375"	1	
56	100120	Wiring Harness, Carriage Tilt Sensor	1	

© Globe Food Equipment Company

INTENTIONALLY LEFT BLANK PAGE

© Globe Food Equipment Company

SG13 Knife Drive Motor Components

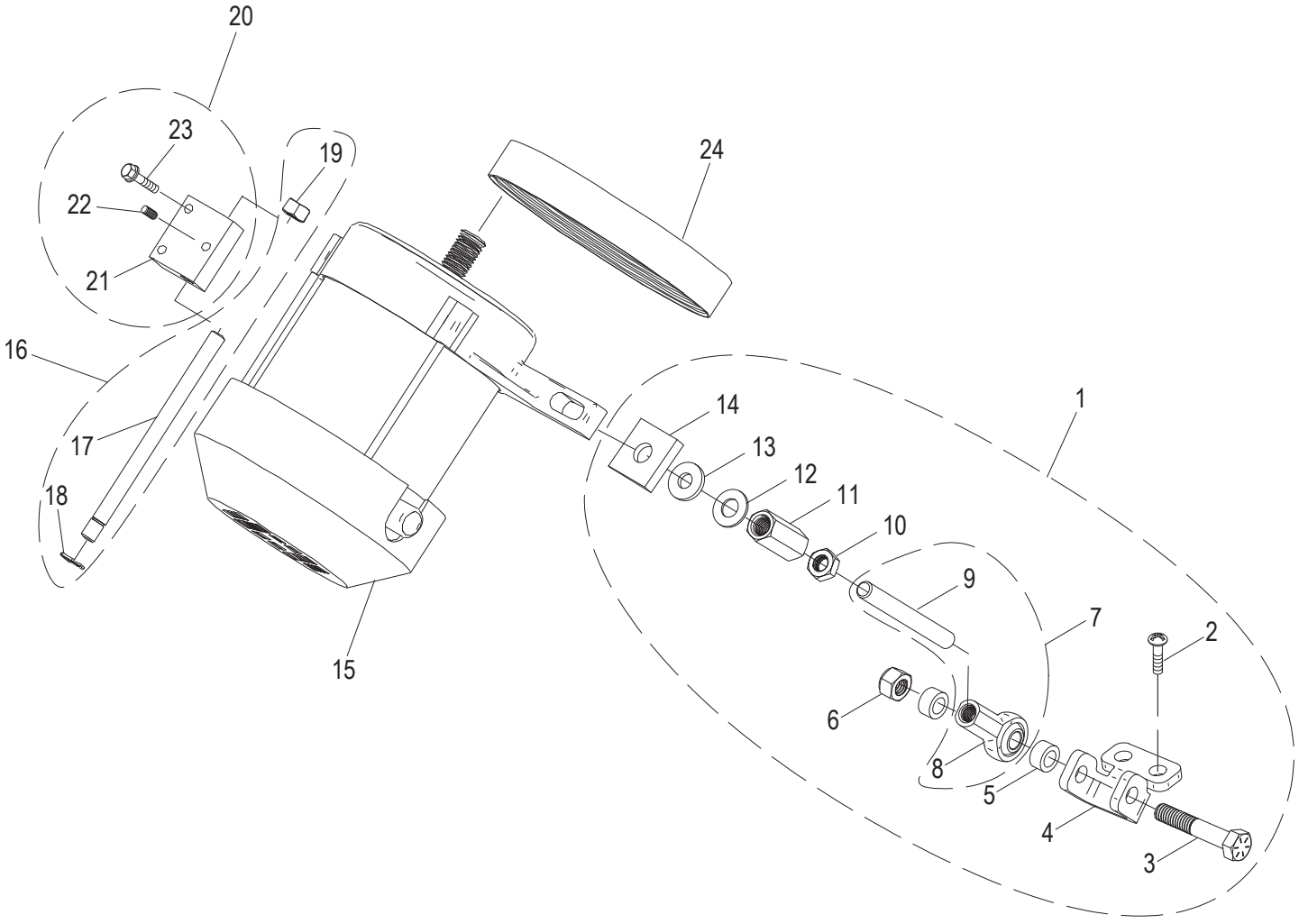

© Globe Food Equipment Company

SG13 Knife Drive Motor Components

Item	Part Number	Description		Qty	Serial Number
1	400124	Knife Tensioner Kit	(Incl. items 2-14)	1	
2	800135	Thread Forming Screw 1/4-20x5/8 PHP		2	
3	810419	Cap Screw, 5/16-18x1.75 Hx Hd		1	
4	300023	Knife Motor Tensioner Bracket		1	
5	500033	Sleeve Spacer		2	
6	810420	Nylon Insert Locknut 5/16-18		1	
7	400125	Threaded Ball Joint, Knife Tensioner	(Incl. items 8-9)	1	
8	800093	Ball Joint Rod End 5/16'-24 Thd		1	
9	450034	Tension Shaft 5/16-24 x 3 Full Thread		1	
10	810414	Nut 5/16-24 UNF Zinc Plated Steel Hex Jam		1	
11	800162	Nut 5/16-24x1 Hex Coupling		1	
12	810416	Flat Washer, 5/16 x 0.69		1	
13	810417	Washer 5/16 Neoprene		1	
14	800161	Washer 5/16 Leveling		1	
15	120158-01	Knife Drive Motor, Single Phase, 120V, 60Hz		1	
15	120158-02	Knife Drive Motor, Single Phase, 220V, 60Hz	Not Shown	1	
15	120158-03	Knife Drive Motor, Single Phase, 220V, 50Hz	Not Shown	1	
16	400113	Motor Mount Pivot Rod Assembly	(Incl. items 17-191)	1	
17	400026	Motor Mount Pivot Rod		1	
18	810429	External Retaining Ring 0.25x0.042		1	
19	810420	Nylon Insert Locknut 5/16-18		1	
20	400123	Motor Pivot Block Kit	(Incl. items 21-23)	1	
21	450117	Motor Pivot Block		1	
22	800094	Hex Socket Knurl-Cup Point Set Screw 10-32 x 0.25		1	
23	800068	Washer #10-24x1 Hex Hd Tap. Screw Slotted		2	
24	800092	Knife Drive Belt		1	

© Globe Food Equipment Company

SG13 Transport Arm Assembly Components

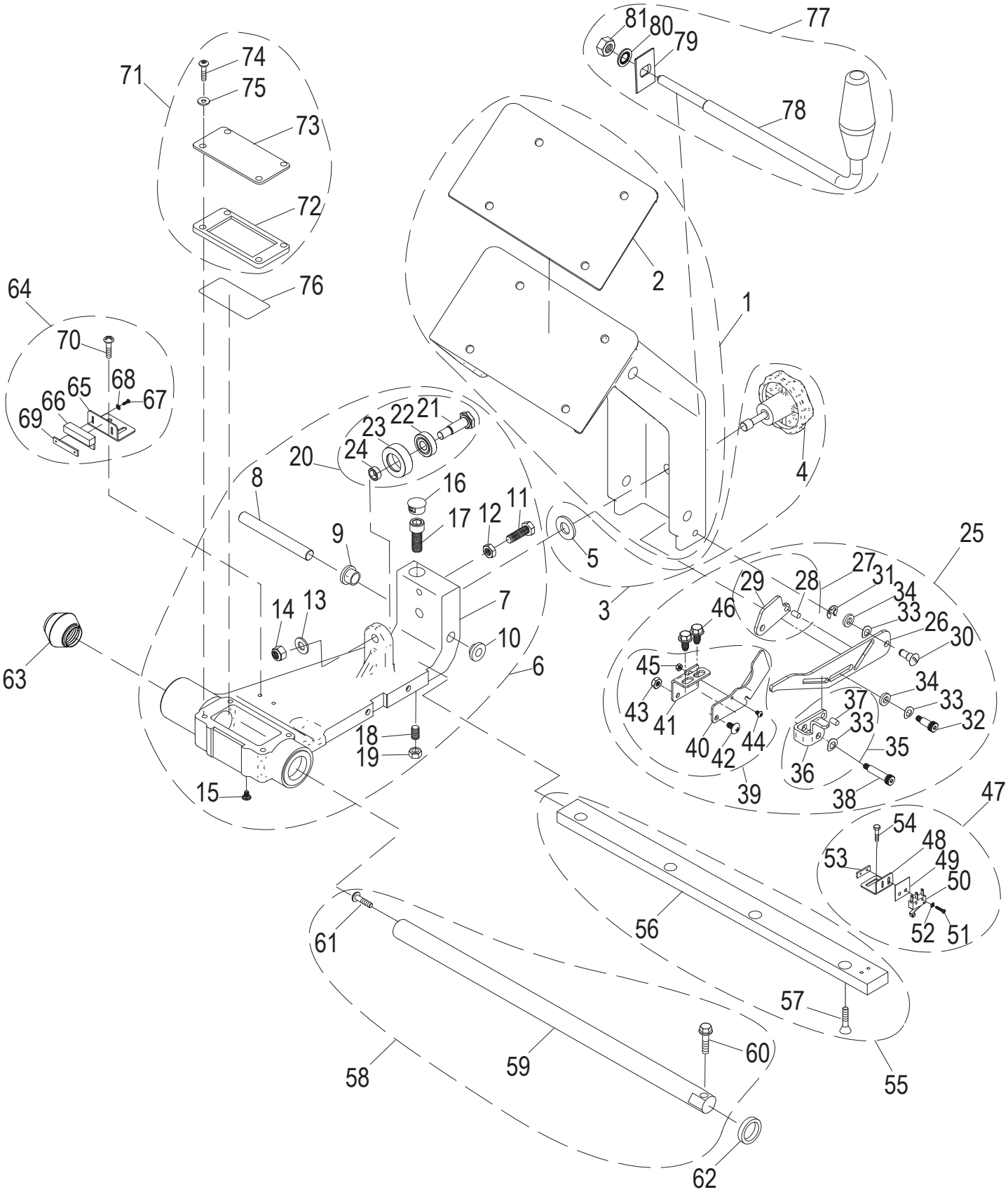

© Globe Food Equipment Company

SG13 Transport Arm Assembly Components

Item	Part Number	Description	Qty	Serial Number
1	400129	Carriage Arm & Gasket Kit (Incl. item 2)	1	
2	500004	Carriage Arm Gasket	1	
3	500052	Carriage Knob & Captive Clip Kit (Incl. items 4-5)	1	
4	500026	Carriage Arm Tie Down Knob	1	
5	800180	Washer, Nylon	1	
6	400115	Transport Replacement Assembly (Incl. items 7-24)	1	
7	420062	Transport with Bushings	1	
8	400017	Transport Attachment Pin	1	
9	810237	Shoulder Washer .51 IDx.88 Nylon	1	
10	810238	Shoulder Washer .51 IDx1.125 Nylon	1	
11	810406	Hex Cap Screw 5/16-24x1,18-8 (SST)	1	
12	810414	Nut 5/16-24 UNF Zinc Plated Steel Hex Jam	1	
13	810272	Flat Washer 5/16 x 0.63	1	
14	810420	Nylon Insert Locknut 5/16-18	1	
15	810232	Phillips Pan Head Sealing Screw 8-32 x 0.25"	1	
16	810227	Dome Plug for 5/8 Hole	1	
17	810256	Socket Hd Cap Screw 3/8-16 x 1 (SST)	1	
18	800015	Transport Tie Down Screw 5/16-24x1.30"	1	
19	800048	Hex Nut 5/16-24	1	
20	800014	Roller Bearing Assembly (Incl. items 21-24)	1	
21	810351	Roller Bearing Bolt	1	
22	810363	Roller Bearing	1	
23	500003	Bearing Sleeve	1	
24	810352	Spacer Sleeve	1	
25	300061	Table Interlock Kit (Incl. items 26-46)	1	
26	300049	Transport Slide Lock Plate	1	
27	300057	Lock Plate Assembly	1	
28	300050	Lock Plate	1	
29	810451	Dowel Pin, 5/32 x 5/16 (SST)	1	
30	800029	Reverse Shoulder Bolt	1	
31	800082	E-Clip Retaining Ring for 1/4" Shaft	1	
32	810455	Shoulder Bolt 1/4" x 1/2", #10-32 Thread	1	
33	870092	Spring Washer 0.256 x 0.490	3	
34	810459	Washer, Nylon .265 ID, .50 OD, .094 Thick	2	
35	300058	Cam Lock Plate Assembly (Incl. items 36-37)	1	
36	300051	Cam Lock Plate	1	
37	810451	Dowel Pin, 5/32 x 5/16 (SST)	1	
38	810454	Shoulder Bolt 1/4" x 1", #10-32 Thread	1	
39	300059	Lock Out Assembly (Incl. items 40-45)	1	
40	300053	Pivot Stop Plate	1	
41	300052	Slide Pivot Plate Bracket	1	
42	810457	Mach. Screw, #10-32 x 1/2 Phil Truss	1	
43	810458	Nylon Insert Lock Nut #10-32	1	
44	810456	Mach. Screw #5-40 x 1/2 Button Socket Cap	1	
45	800170	Hex Nut, Nylon Lock #5-40	1	
46	800057	Screw 1/4-20x.75 Hex Washer Hd Tapping	2	
47	121089	Carriage Tilt Switch Kit (Incl. items 48-54)	1	
48	310201	Carriage Tilt Back Sensor Mount	1	
49	140125	Micro Switch Insulator	1	
50	110109	Micro Switch	1	
51	800126	Mach. Screw #2-56x7/16 Pan Hd. Phillips	2	
52	800098	Lock Washer #2 Internal Tooth	2	
53	300055	Nut Plate	1	

© Globe Food Equipment Company

SG13 Transport Arm Assembly Components

Item	Part Number	Description	Qty	Serial Number
54	800099	Hex Head Screw #8-32x0.375	2	
55	400131	Transport Roller Bar Kit (Incl. items 56-57)	1	
56	450061	Transport Roller Bar	1	
57	810004	Tapping Screw 1/4-20x1 Cross Rec. FH	4	
58	400132	Transport Shaft Kit (Incl. items 59-61)	1	
59	450060	Transport Shaft	1	
60	800059	Washer 5/16-18x1.25 Hex Hd Tapping Screw	1	
61	800071	Slotted Truss Head Screw 5/16-18x1.0	1	
62	500005	Transport Bumper	1	
63	800131	Sleeved Spring Assembly	1	
64	121090	Carriage Magnet Kit (Incl. items 65-70)	1	
65	310199	Transport Switch Magnet Mount	1	
66	110118	Magnet	1	
67	800101	Mach. Screw #1-64x1/4, 18-8 Pan Hd. Phillips (SST)	2	
68	800098	Lock Washer #2 Internal Tooth	2	
69	300056	Nut Plate	1	
70	800069	Phillips Round Head Thread Forming Screw 8-32 x 0.375"	2	
71	300064	Transport Cover Kit (Incl. items 72-75)	1	
72	510058	Oil Well Gasket	1	
73	300080	Transport Cover	1	
74	800109	Screw 1/4-20x.50 Button Hd Cap	4	
75	800079	Flat Washer, 1/4x0.625	4	
76	800053	Felt Insert	1	
77	400114	Carriage Arm Handle Assembly with Nut (Incl. items 78-81)	1	
78	460076	Carriage Arm Handle	1	
79	400155	Anti Rotation Block	1	
80	810226	Lock Washer, 1/2 Screw Size, Internal Tooth	1	
81	810224	Hex Nut, 1/2-13 Left Hand, Thread	1	

© Globe Food Equipment Company

INTENTIONALLY LEFT BLANK PAGE

© Globe Food Equipment Company

SG13 Lift Lever Base Components

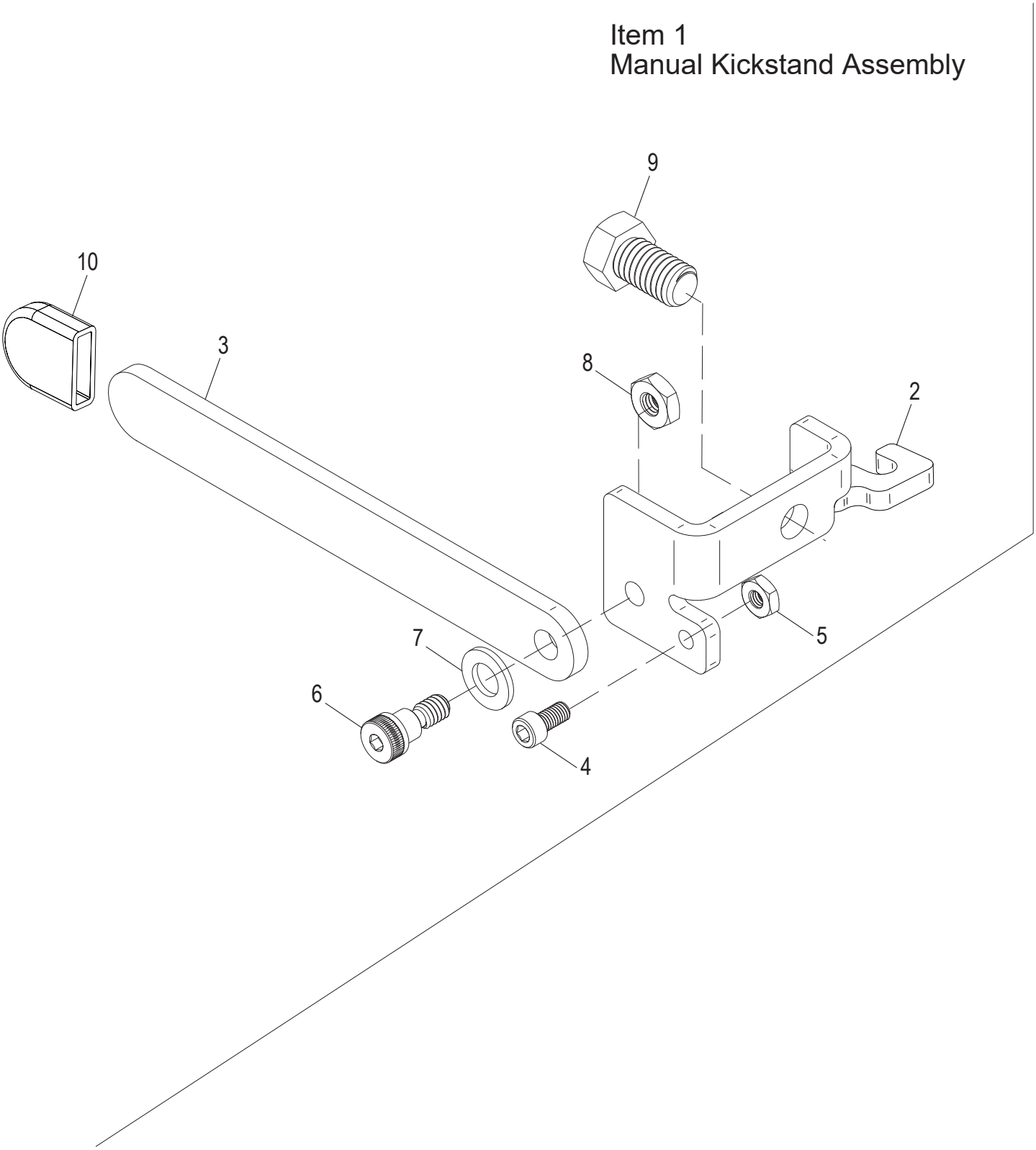

© Globe Food Equipment Company

SG13 Lift Lever Base Components

Item	Part Number	Description	Qty	Serial Number
1	300046	Manual Kickstand Assembly (Incl. items 2-10)	1	
2	300044	Manaul Kickstand Bracket	1	
3	300045	Manual Kickstand Arm	1	
4	800124	Socket Hd. Cap Screw #10-32 x 3/8 SST	1	
5	800125	Hex Nut, #10-32 SST	1	
6	800122	Long Shoulder 5/16" Dia. x 1/4" Screw 1/4"-20 Thrd	1	
7	810272	Flat Washer 5/16 x 0.63	1	
8	800128	Nylon-Insert Thin Hex Nut 1/4-20 SST	1	
9	800189	Cap Screw, 5/16-18 UNCx3/4 Hx Hd	1	
10	500062	Manual Kickstand Boot	1	

© Globe Food Equipment Company

SG13 Carriage and End Weight Assembly Components

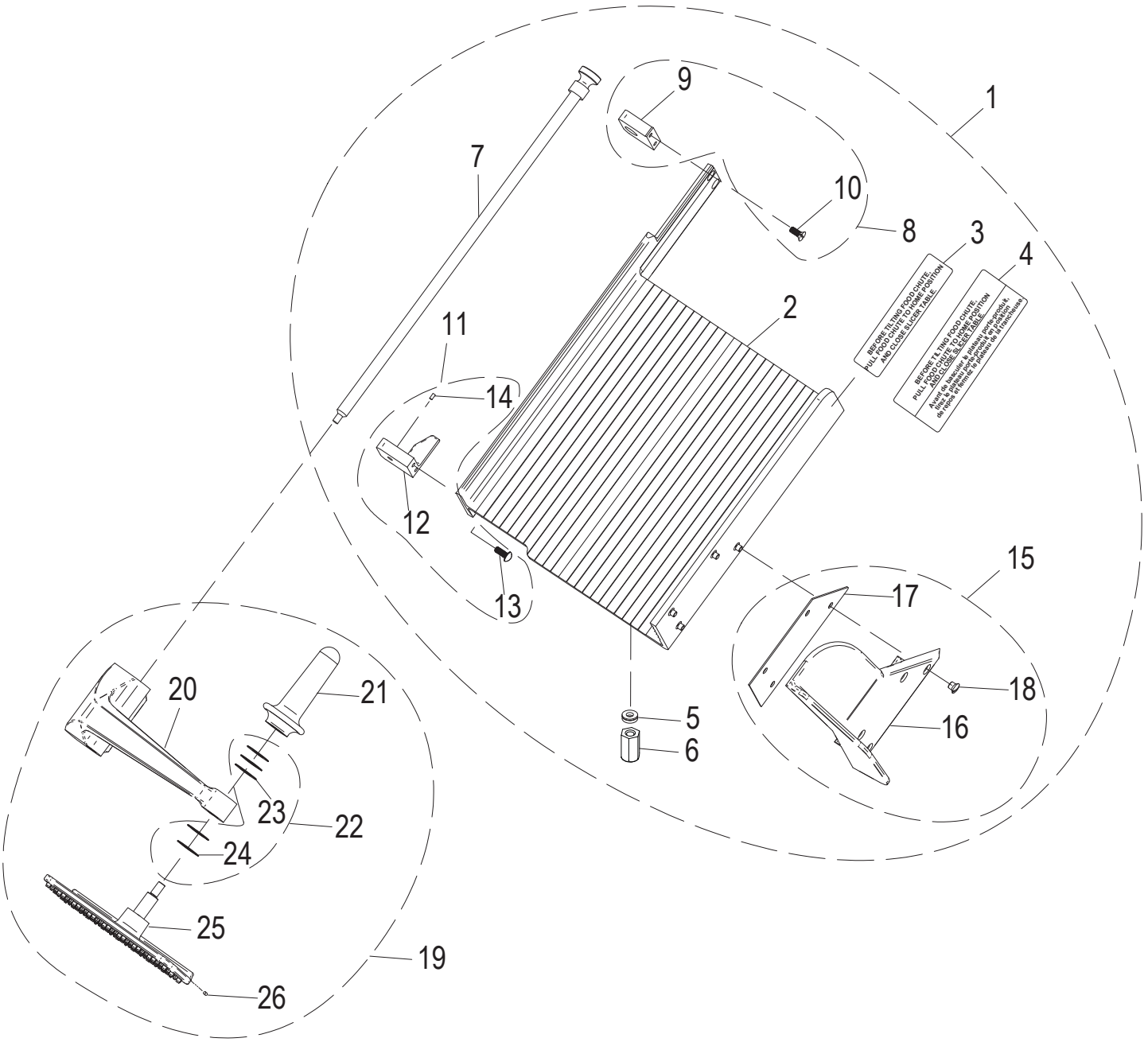

© Globe Food Equipment Company

SG13 Carriage and End Weight Assembly Components

Item	Part Number	Description	Qty	Serial Number
1	400138	Carriage Assembly Kit (Incl. items 2-18)	1	
2	400012	Carriage Insert Assembly	1	
3	920196	Carriage Tilt Label	1	
4	920197	Carriage Tilt Label (French)	1	
5	800085	Washer 1/4" Screw, Self Aligning	4	
6	800188	Custom Nut, 1/4-20	4	
7	450158	End Weight Shaft Assembly	1	
8	400135	Rod Mount Kit End Weight (Incl. items 9-10)	1	
9	450156	End Weight Rod Mount	1	
10	800037	Mach. Screw 1/4-20 x 5/8 FH Slotted	2	
11	400136	End Weight Stop Kit	1	
12	420094	End Weight Stop	1	
13	800038	Mach. Screw 1/4-20 x 5/8 RH Slotted	2	
14	800205	Stop Pin, Delrin End Weight	1	
15	500046	Thumb Guard Assembly (Incl. items 16-18)	1	
16	510065	Carriage Thumb Guard	1	
17	510038	Carriage Thumb Guard Gasket	1	
18	810366	Thumb Guard Screw	4	
19	500027-01	End Weight Assembly (Incl. items 20-26)	1	
20	420065	End Weight Arm Assembly	1	
21	500024	End Weight Handle	1	
22	800164	End Weight Face Washer Kit (Incl. items 23-24)	1	
23	800033-02	End Weight Face Washer	1	
24	800033-01	End Weight Face Washer	4	
25	500007	Molded End Weight Assembly	1	
26	800047	Delrin Pin, 1/8 Dia x 3/8	1	

© Globe Food Equipment Company

SG13 Knife and Knife Cover Components

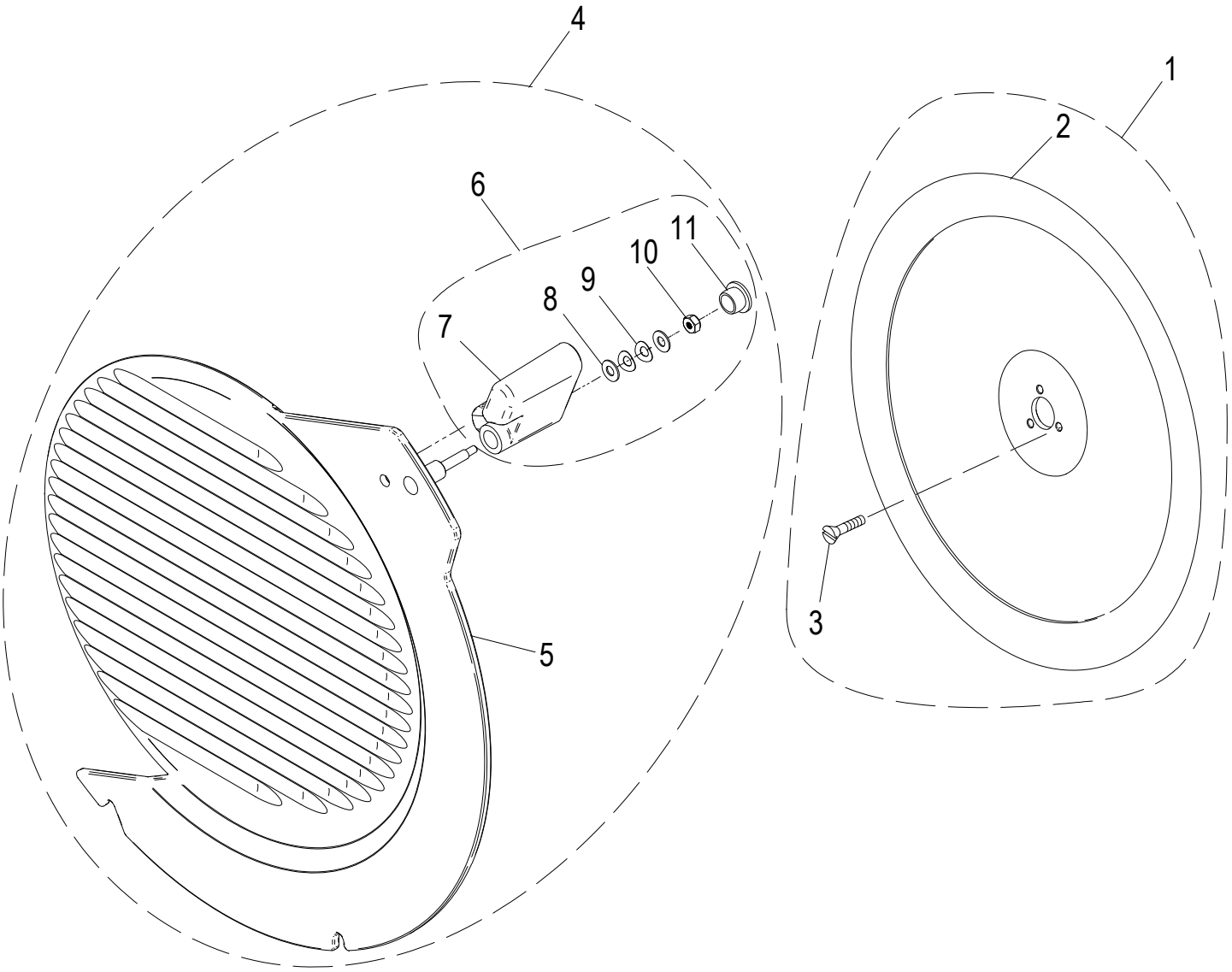

© Globe Food Equipment Company

SG13 Knife and Knife Cover Components

Item	Part Number	Description		Qty	Serial Number
1	400139-01	Knife Kit	(Incl. items 2-3)	1	
2	450170	13 Inch Steel Knife		1	
3	810274	Slotted Flat Head Screw,10-32x0.5		3	
1	400161-01	Stainless Steel Knife Kit	(Incl. items 2-3) Not Shown	1	
2	450171	Knife, 13 inch (SST)	Not Shown	1	
3	810274	Slotted Flat Head Screw,10-32x0.5	Not Shown	3	
4	250247	Knife Cover Assembly	(Incl. items 5-11)	1	
5	460090	Knife Cover Sub-Assembly		1	
6	500045	Knife Cover Swivel Lock Assembly	(Incl. items 7-11)	1	
7	520245	Knife Cover Swivel Lock		1	
8	810278	Flat Washer, No.10x0.44		2	
9	810279	Spring Washer #10 x 0.42		2	
10	810245	Nut, 6-32 INC-2B Hex, with Nylon Insert		1	
11	520237	Barrel Plug, Push-In		1	

© Globe Food Equipment Company

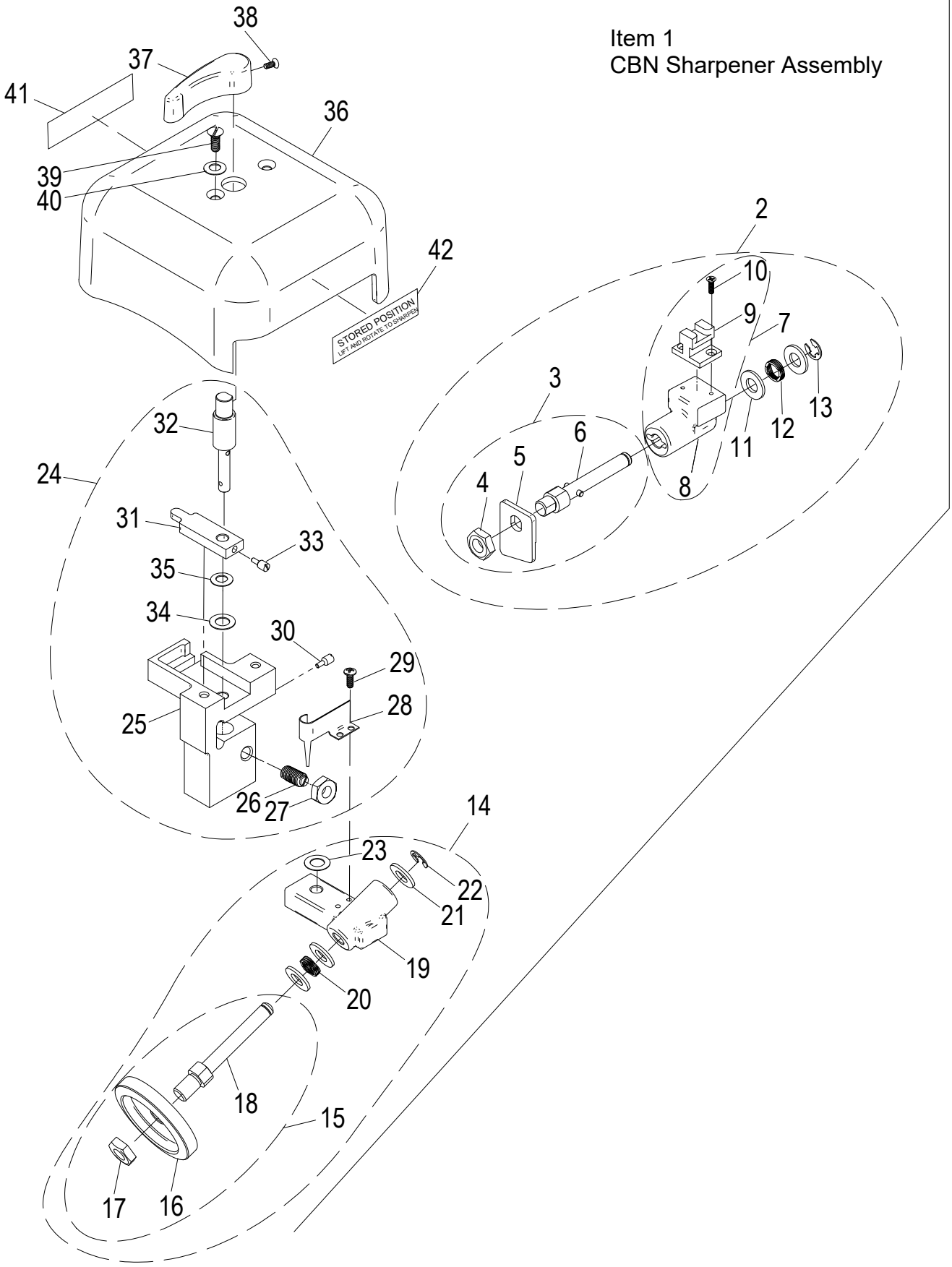

© Globe Food Equipment Company

SG13 Sharpener Assembly Components

Item	Part Number	Description		Qty	Serial Number
1	440044	CBN Sharpener Assembly	(Incl. items 2-41)	1	
2	430051	CBN Honing Stone Assembly	(Incl. items 3-12)	1	
3	940033	CBN Honing Stone Shaft Assembly	(Incl. items 4-6)	1	
4	810430	Jam Nut 3/8-24		1	
5	240045	Honing Stone		1	
6	450163	Honing Stone Dowel Assembly		1	
7	400291	Honing Stone Bracket Kit		1	
8	430032	Honing Stone Bracket		1	
9	430042	Honing Stone Slide		1	
10	810222	Phillips Flat Head Screw #4-40 x 0.38		2	
11	810272	Flat Washer 5/16 x 0.63		2	
12	810362	Wave Spring 0.38 x 0.49 x 0.14		1	
13	810273	External Retaining Ring, Type E 0.243 x .50		1	
14	430052	CBN Sharpening Stone Assembly	(Incl. items 14-22)	1	
15	940044	CBN Sharpening Stone Shaft Assembly	(Incl. items 15-17)	1	
16	410048	Sharpening Stone		1	
17	810430	Jam Nut 3/8-24		1	
18	460065	Sharpening Stone Shaft		1	
19	430031	Sharpening Stone Bracket		1	
20	810361	Wave Spring 0.37 x 0.49 x 0.15		1	
21	810272	Flat Washer 5/16 x 0.63		3	
22	810273	External Retaining Ring, Type E 0.243 x .50		1	
23	810437	Flat Washer 5/16 x 0.57		1	
24	400137	Sharpener Mount Center Kit	(Incl. items 24-34)	1	
25	430045	Sharpener Center Mount		1	
26	810488	Slotted Ball Plunger, 1/4-28 x 0.531		1	
27	810489	Jam Nut 1/4-28		1	
28	310137	Sharpener Return Spring		1	
29	810271	Phillips Pan Head Screw #6-32x0.375		2	
30	810344	Slotted Dog Point Set Screw #10-32 x 0.45		1	
31	430040	Honing Stone Lever		1	
32	400183	Sharpener Handle Shaft		1	
33	810344	Slotted Dog Point Set Screw #10-32 x 0.45		1	
34	810437	Flat Washer 5/16 x 0.57		1	
35	800184	Spring Washer 0.26x0.55x0.015		1	
36	250069	Sharpener Cover		1	
37	510041	Sharpener Handle, Top	Refer to Serial Number Document	1	
37	500070	Sharpener Handle, Top	Refer to Serial Number Document	1	
38	810233	Mach. Screw 8-32x1/2 Black, Phillips, w/Nylon Patch	Refer to Serial Number Document	1	
38	800223	Phillips Flat Head Screw #8-32 x 0.375	Refer to Serial Number Document	1	
39	810246	Slotted Truss Head Screw #10-32 x 0.50		2	
40	810279	Spring Washer #10 x 0.42		2	
41	920215	Label, Sharpen Position		1	
42	920216	Label, Stored Position		1	

© Globe Food Equipment Company

SG13 Removable Carriage Components - Option

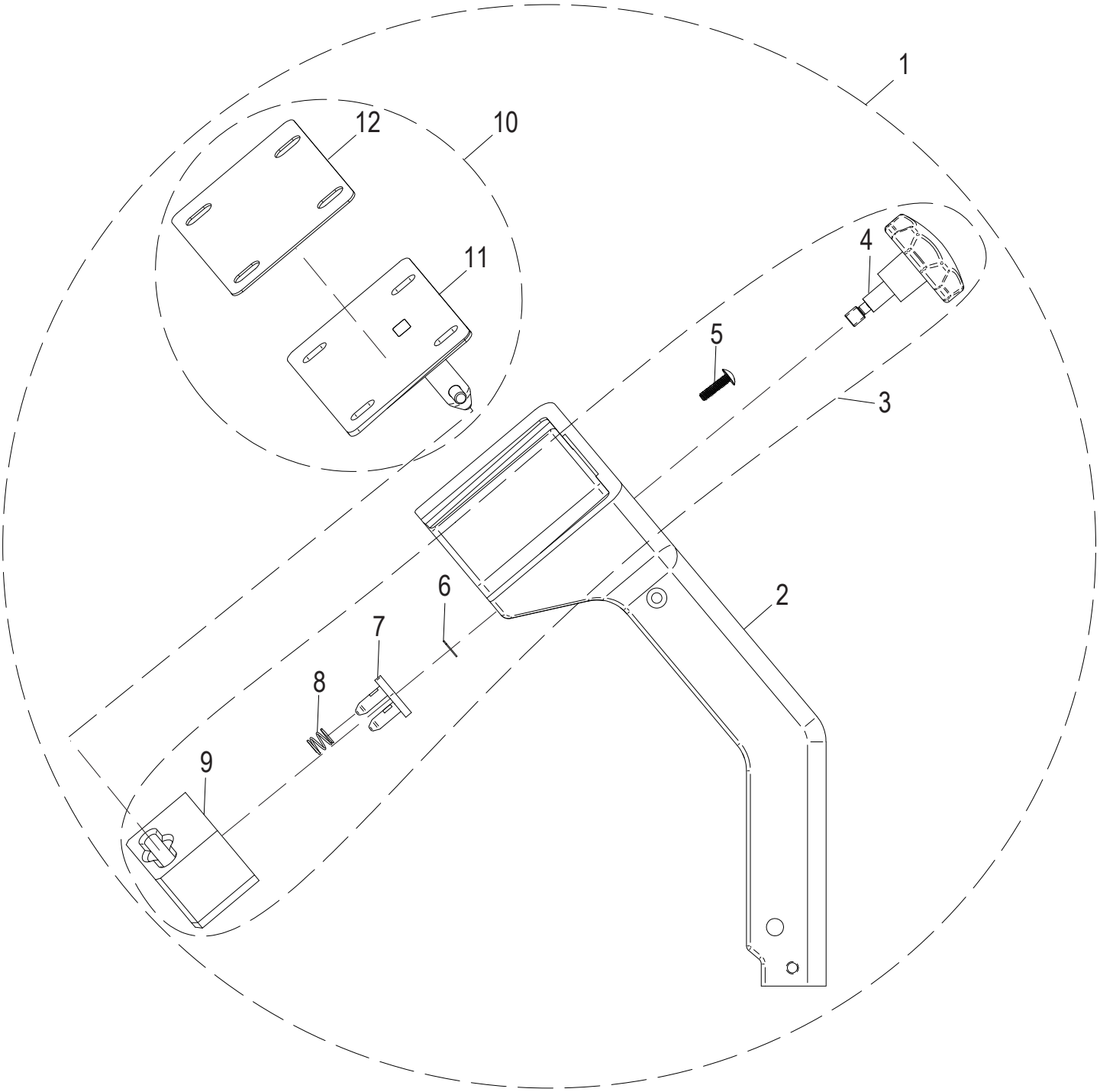

© Globe Food Equipment Company

SG13 Removable Carriage Components - Option

Item	Part Number	Description	Qty	Serial Number
1	450221	Removable Carriage Arm Assembly Kit	1	
2	450217	Carriage Arm for Removable Carriage	1	
3	450220	Removable Carriage Machanism Assembly Kit	1	
4	500056	Removable Carriage Knob Assembly	1	
5	810358	Slotted Truss Head Screw 1/4-20 x 1.00	2	
6	420101	Lock Out Assembly	1	
7	800174	Compression Spring	2	
8	800082	E-Clip Retaining Ring for 1/4" Shaft	1	
9	420103	Guide Block	1	
10	450219	Removable Carriage Attachment Assembly Kit	1	
11	420105	Carriage Attachment Assembly	1	
12	500057	Removable Carriage Gasket	1	

© Globe Food Equipment Company

SG13 Knife Removal Tool - Option

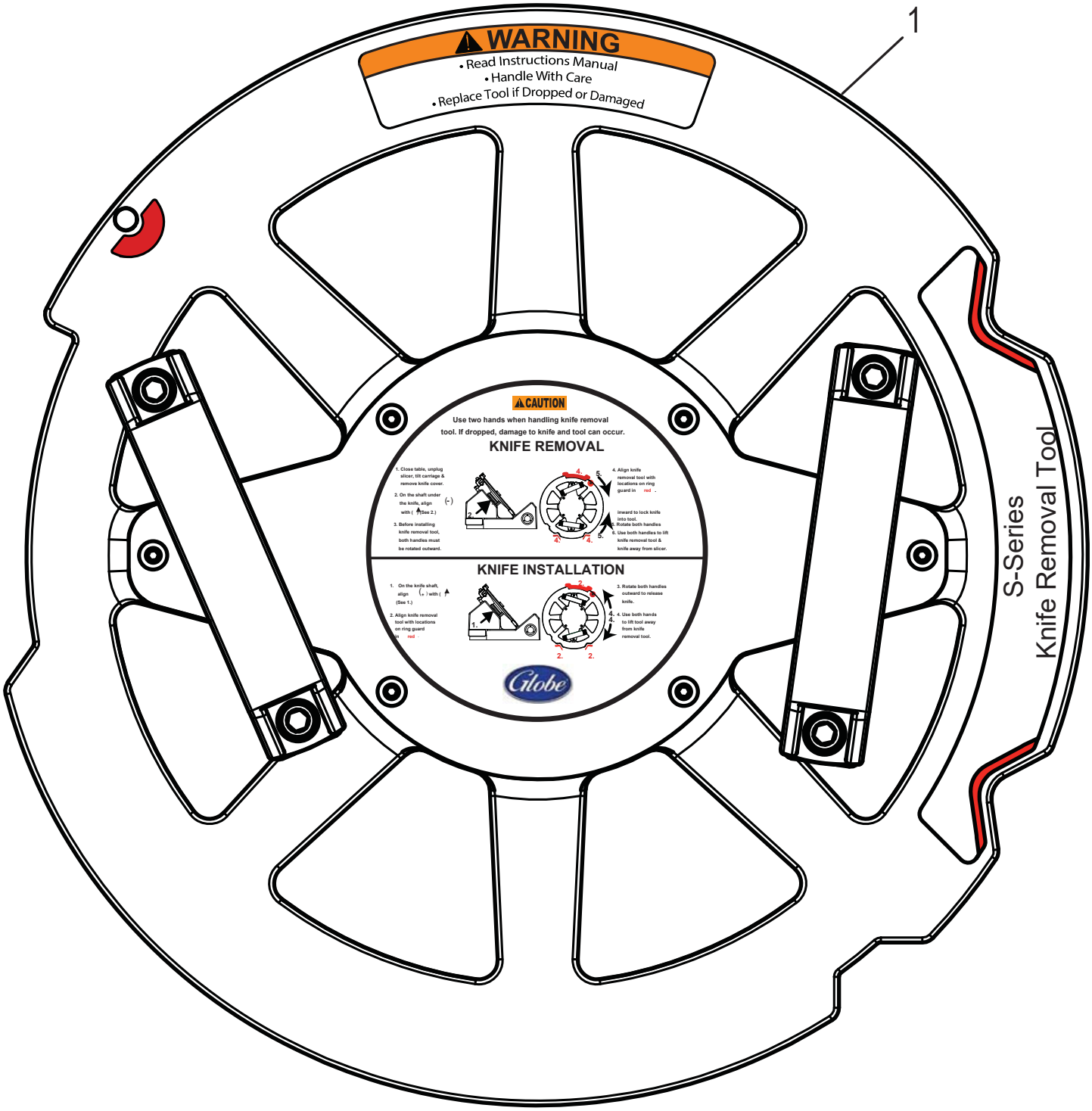

© Globe Food Equipment Company

SG13 Knife Removal Tool - Option

Item	Part Number	Description	Qty	Serial Number
1	450200-01	Removable Knife Tool Assembly	1	

© Globe Food Equipment Company

SG13 Removable Knife Kit - Option

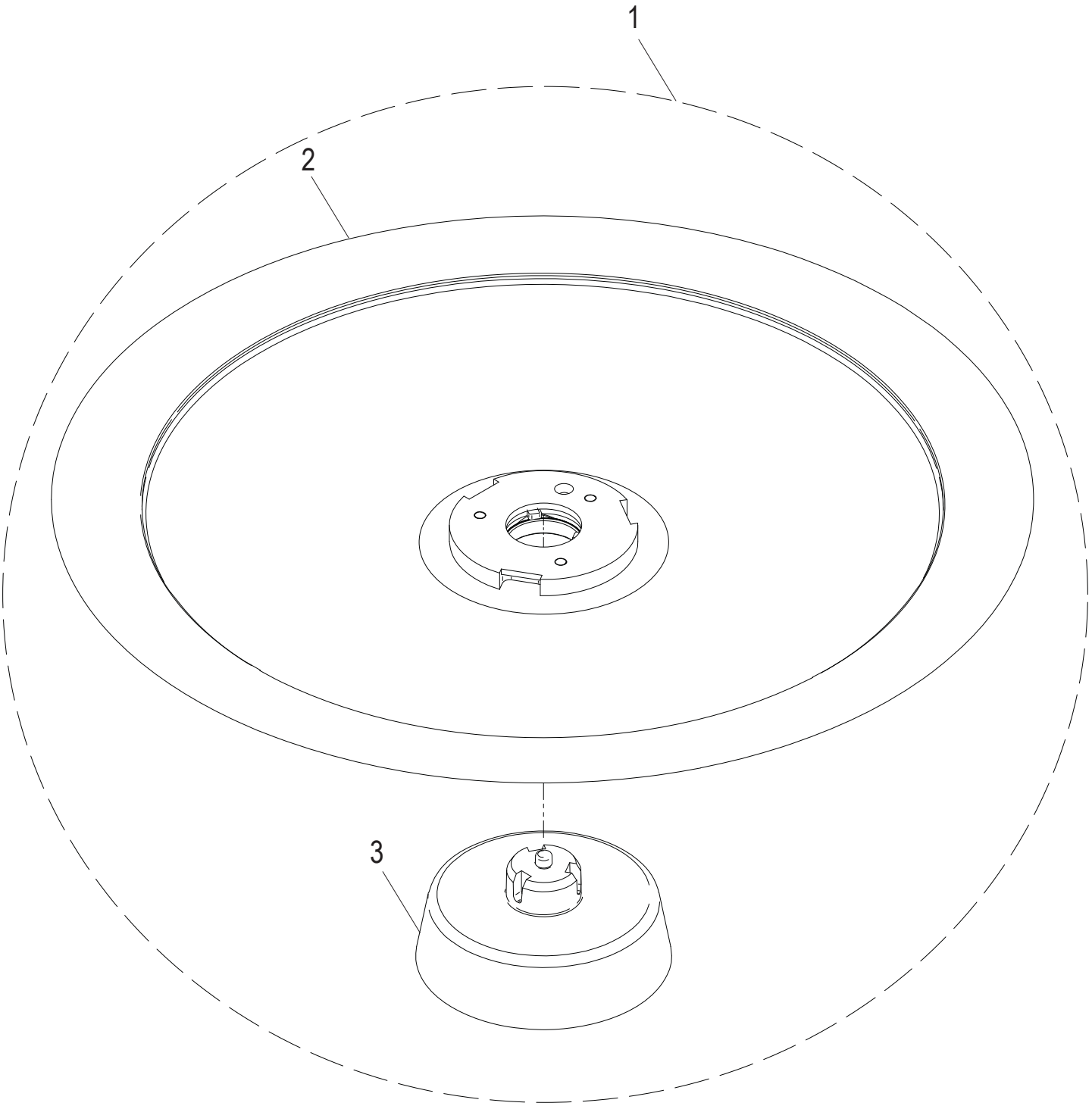

© Globe Food Equipment Company

SG13 Removable Knife Kit - Option

Item	Part Number	Description	Qty	Serial Number
1	450222-01	Removable Knife Kit	1	
2	450183-1	Knife, 13" Removable	1	
3	500051	Post, Service Knife Release	1	
4	450222-03	Removable Knife Kit, SST (Not Shown)	1	
5	450183-3	Knife, 13" SST Removable (Not Shown)	1	
6	500051	Post, Service Knife Release (Not Shown)	1	

© Globe Food Equipment Company

SG13 Removable Knife Drive Kit - Option

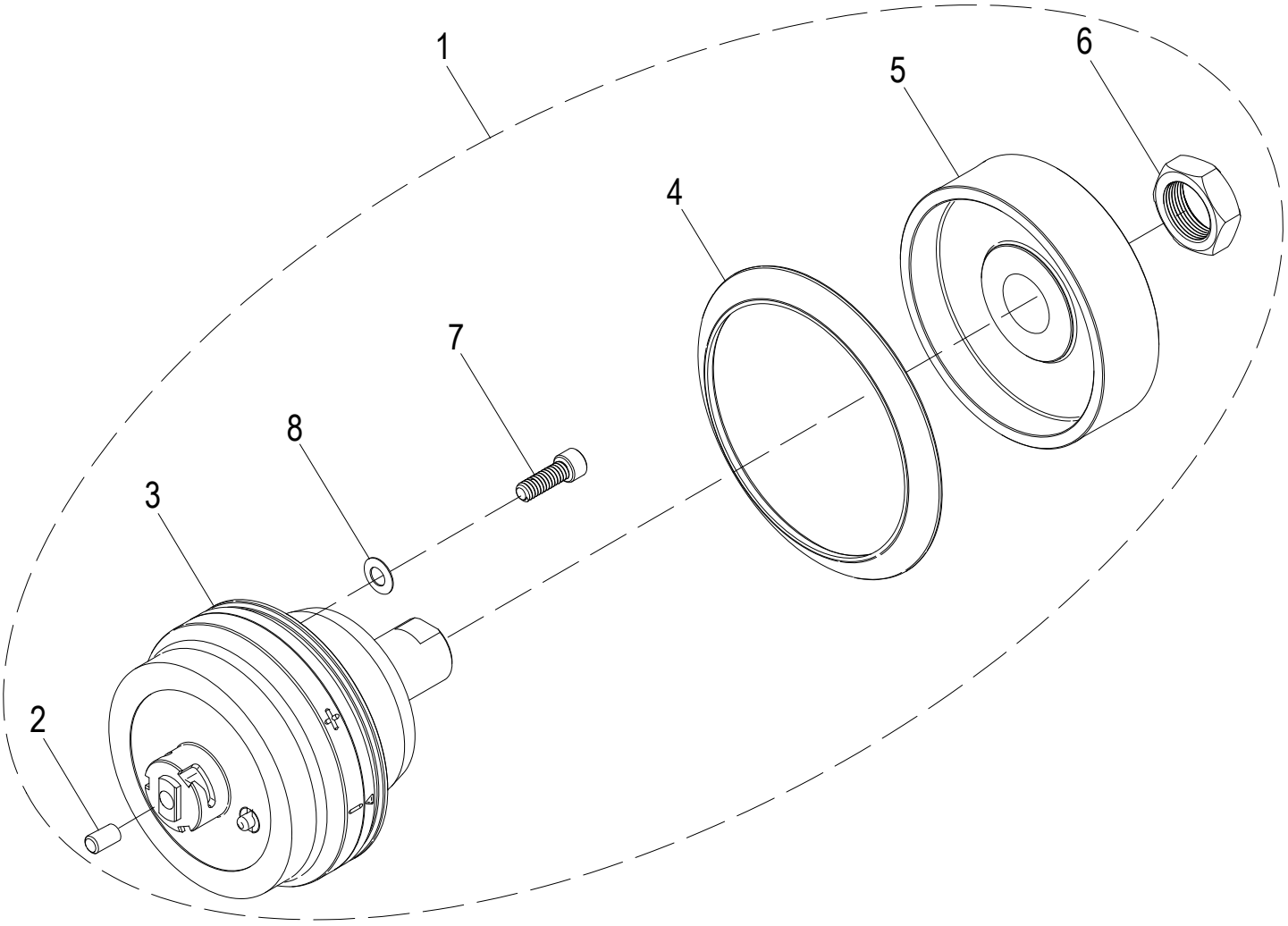

© Globe Food Equipment Company

SG13 Removable Knife Drive Kit - Option

Item	Part Number	Description	Qty	Serial Number
1	450226-01	Removable Knife Drive Kit	1	
2	1193	Plug	1	
3	450203	Shaft, Removable Knife Drive	1	
4	520244	Knife Drive Boot	1	
5	450115	Knife Drive Pulley	1	
6	510033	Hex Nut, 7/8-20 Zinc	1	
7	810229	Socket Head Cap Screw 1/4-20x0.75	4	
8	810275	Spring Washer, 1/4x0.5	4	

© Globe Food Equipment Company

SG13 Wiring Schematic

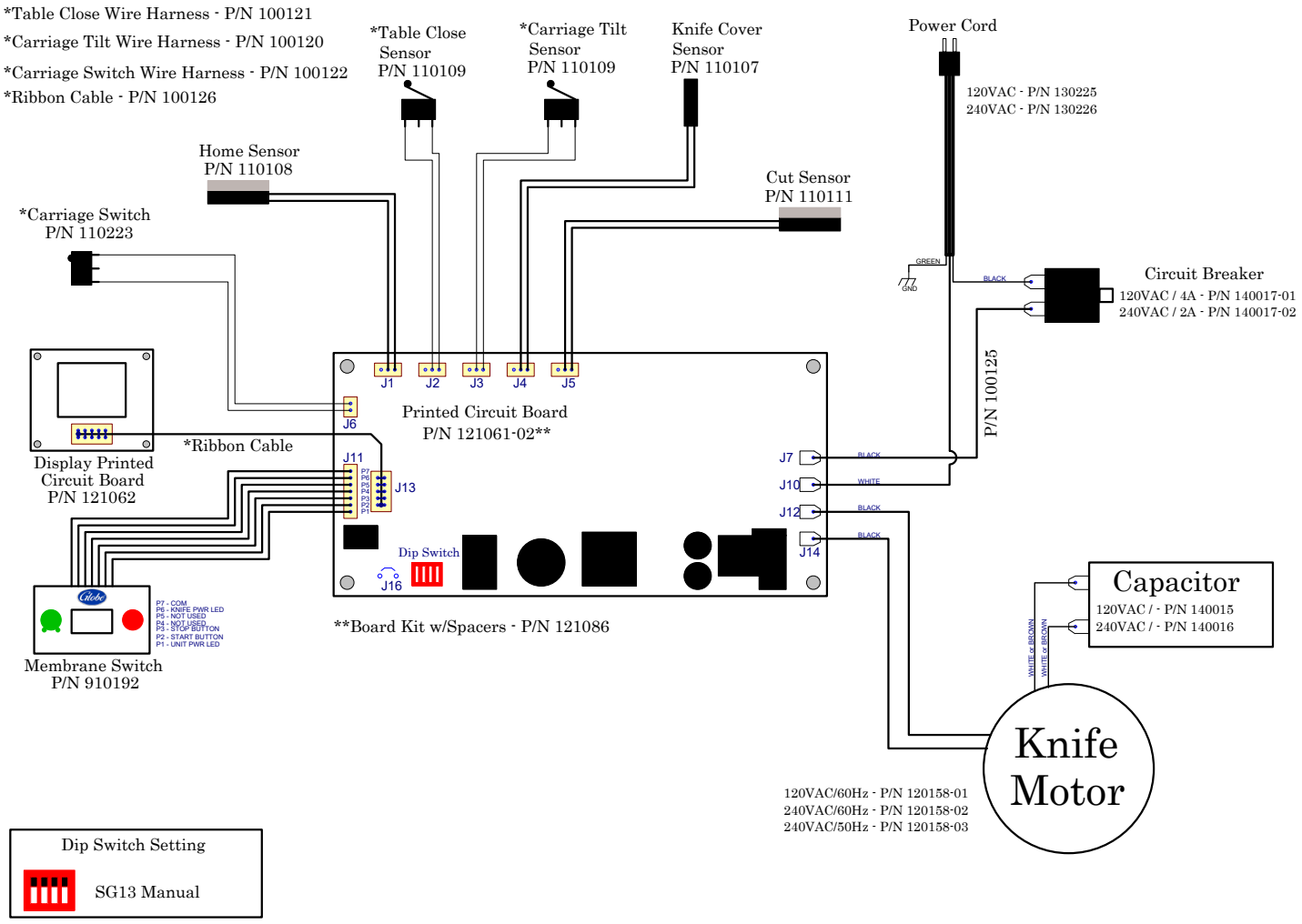

© Globe Food Equipment Company